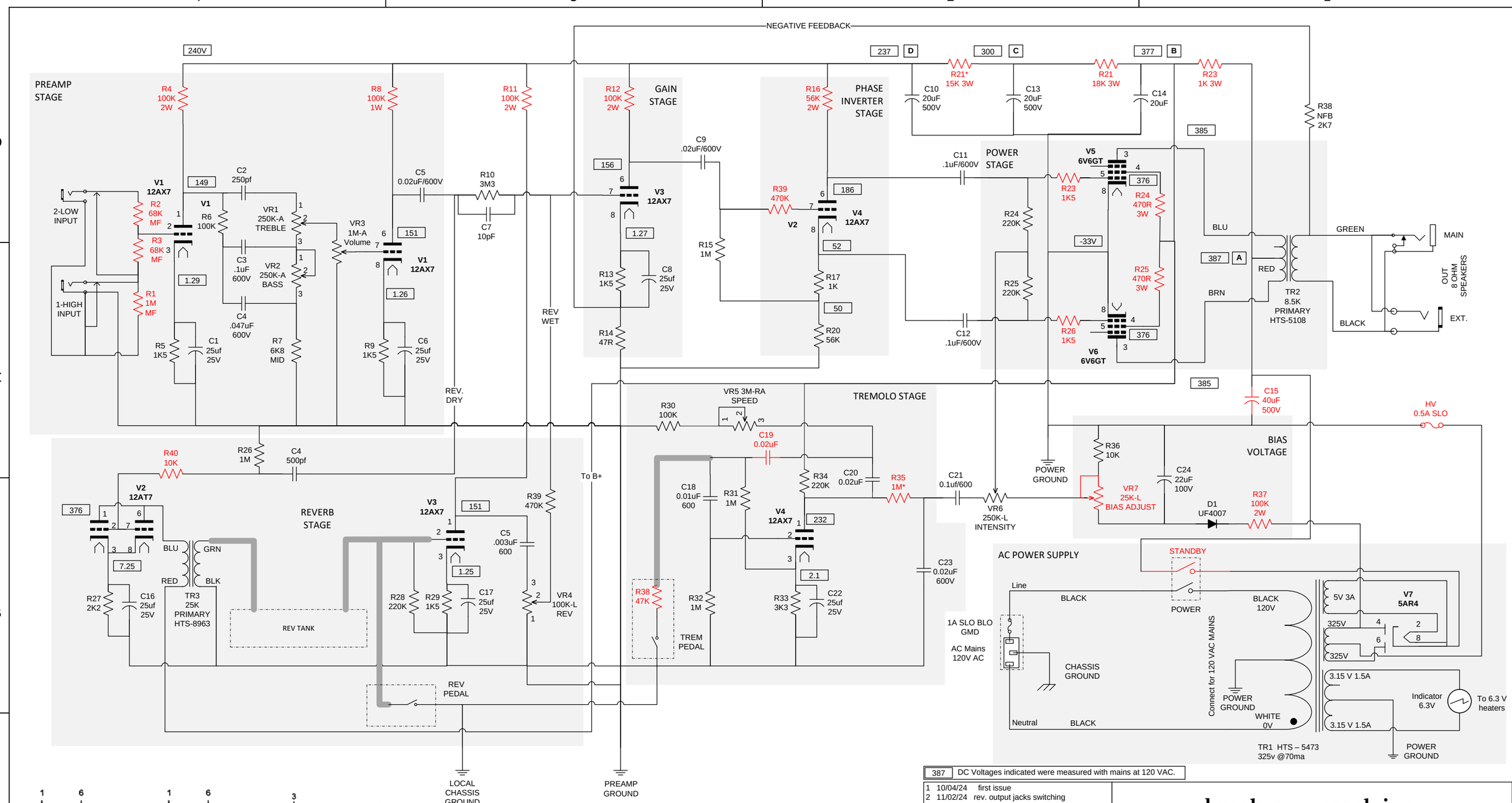

387 DC Voltages indicated were measured with mains at 120 VAC.

1	10/04/24	first issue
2	11/02/24	rev. output jacks switching
3	11/12/24	added R40, 10K to grid V2
4	12/16/24	updated to 100K 2W & 56K 2W
5	12/20/24	corrected VR7 connections
6	12/31/24	changed HV fuse location to PT- CT
7	01/16/25	changed bias filter cap to 22uF; added note for R21; voltages updated; reduced R21 to 15K
8	03/18/25	corrected ground for REV. F.SWITCH
9	01/21/26	removed V2 label on PI

*reduce R35 to 500K or greater to intensify TREM

*reduce R21 if preamp voltages are 'low' 3K/5V increase

breakaway creek inc.

Retro '64 Schematic

SIZE	FSCM NO	DWG NO	REV
			9
SCALE 1 : 1		SHEET 1 OF 51	